EHBO

# ASSEMBLY INSTRUCTIONS

MODEL#: HSF257007

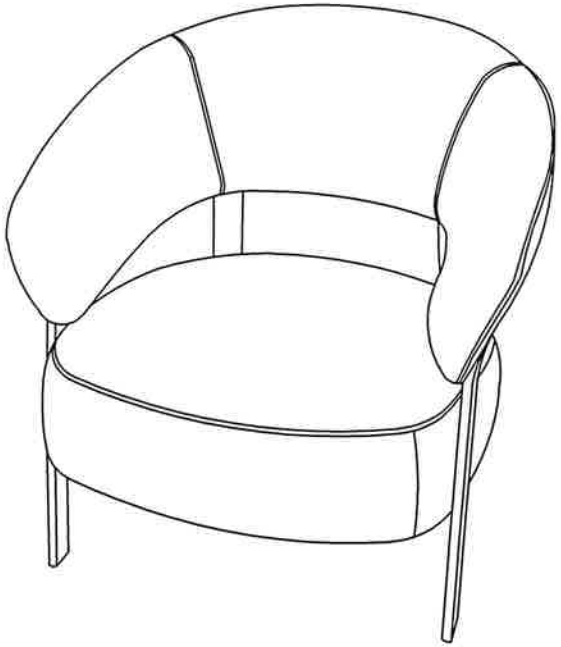

X 1

0:10

| | | | | |
|---|---|---|---|---|
| ① X 1 | ② X 1 | ③ X 1 | ④ X 1 | |
| A M6*55 X 2 | B X 10 | C X 1 | D M6*20 X 4 | E M6*45 X 4 |

1

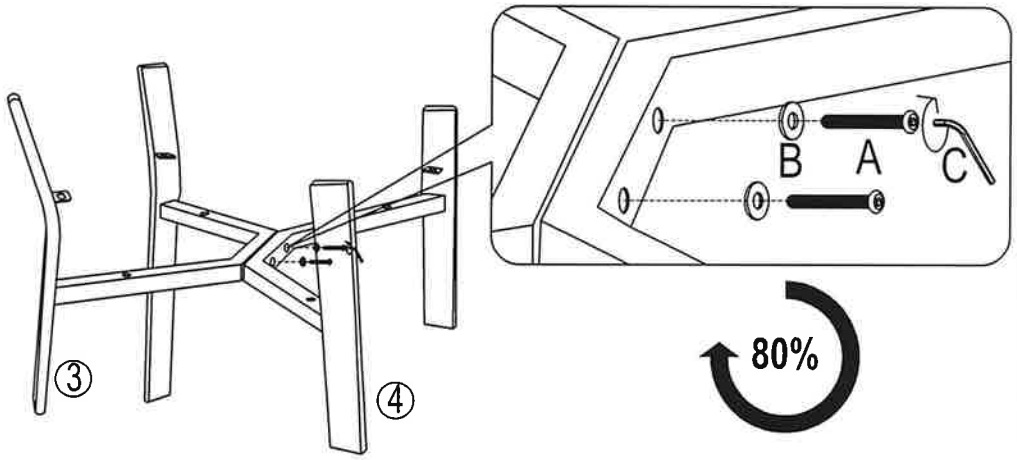


2

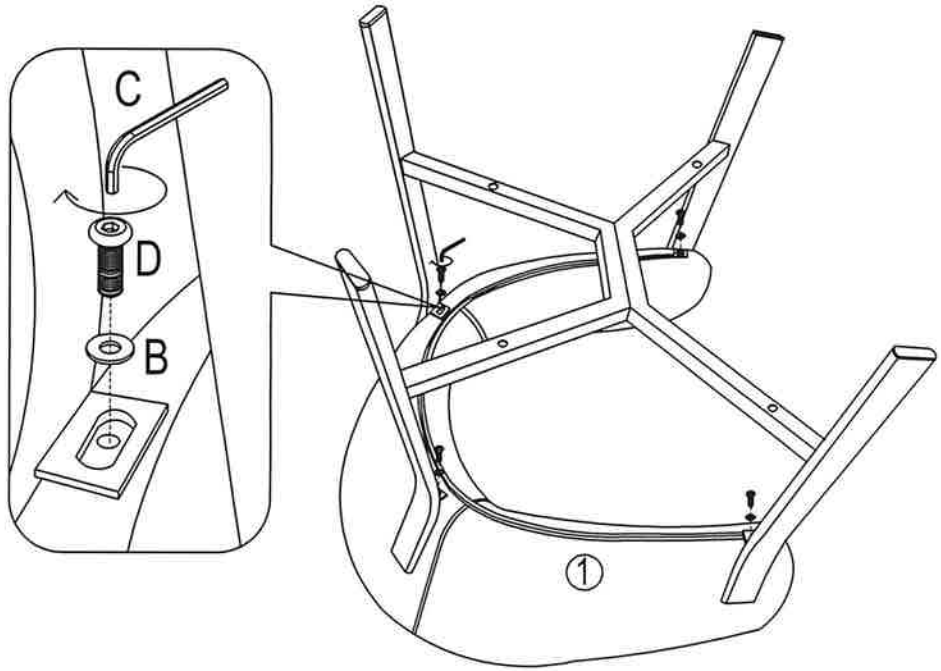

3

