montage instructies
instructions de montage
assembly instructions
montage anleitung

GLORIA

B14 / B16 / B18

MADE IN BELGIUM

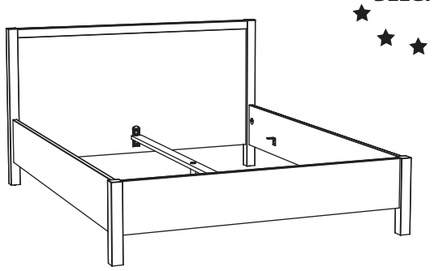

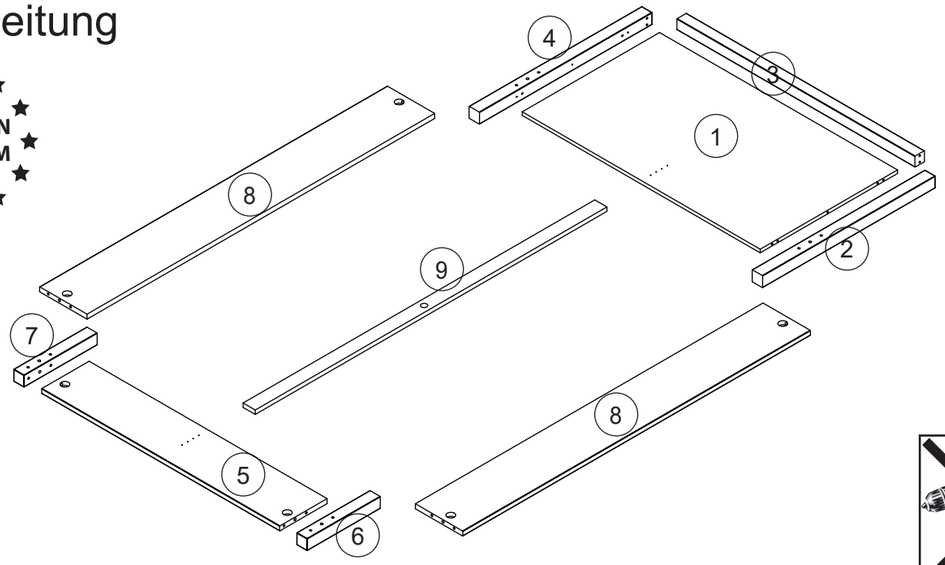

B14 149 x 100 x 212 cm

B16 169 x 100 x 212 cm

B18 189 x 100 x 212 cm

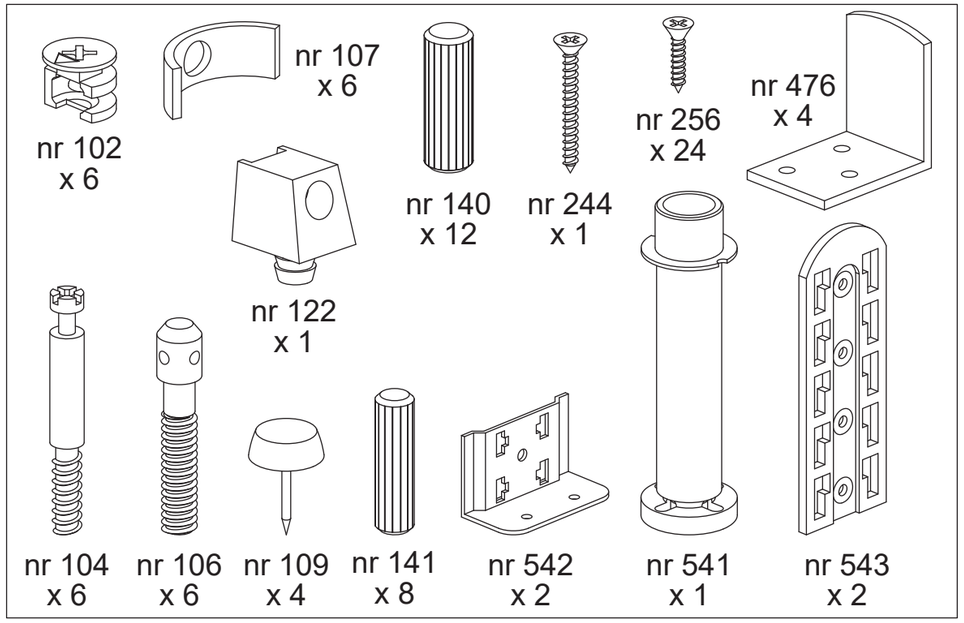

1

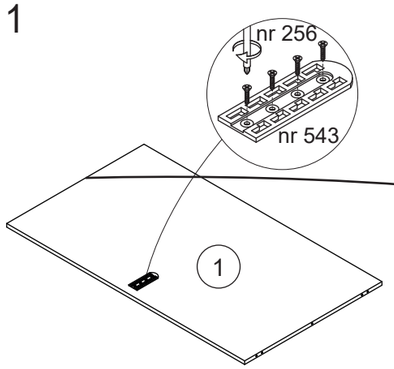

2

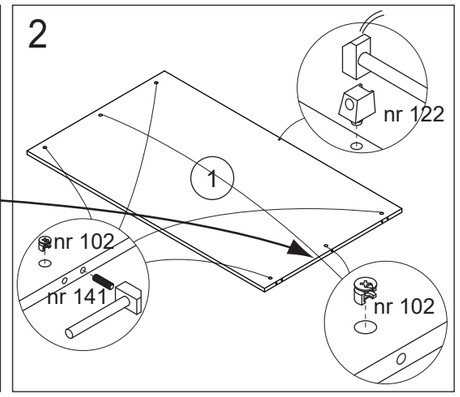

3

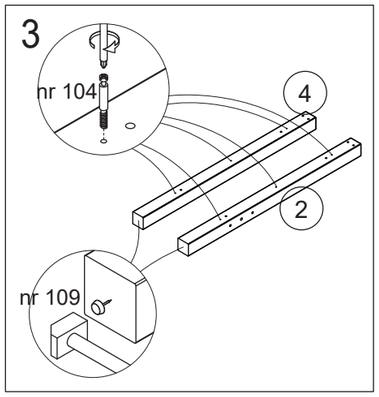

4

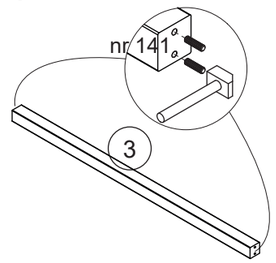

5

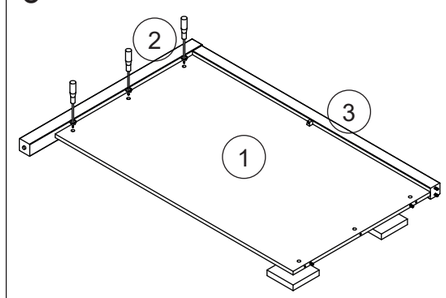

6

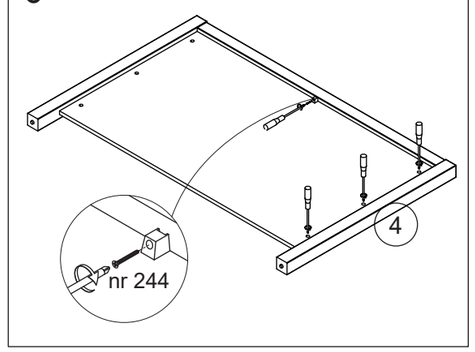

7

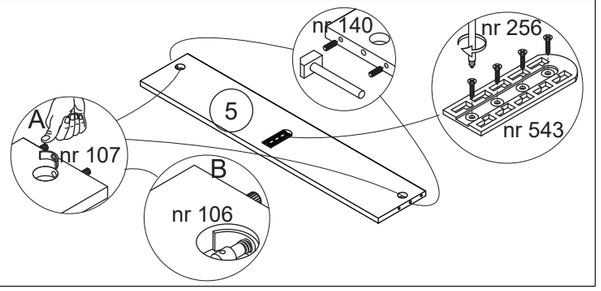

8

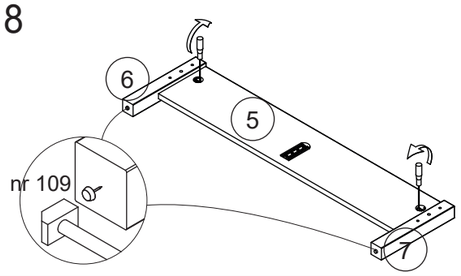

9

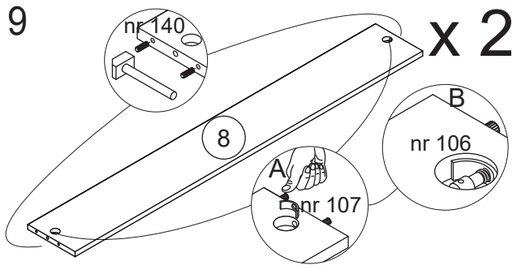

10

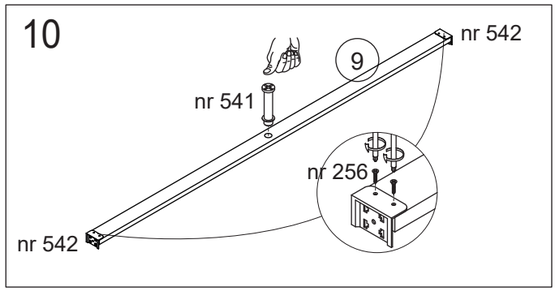

11

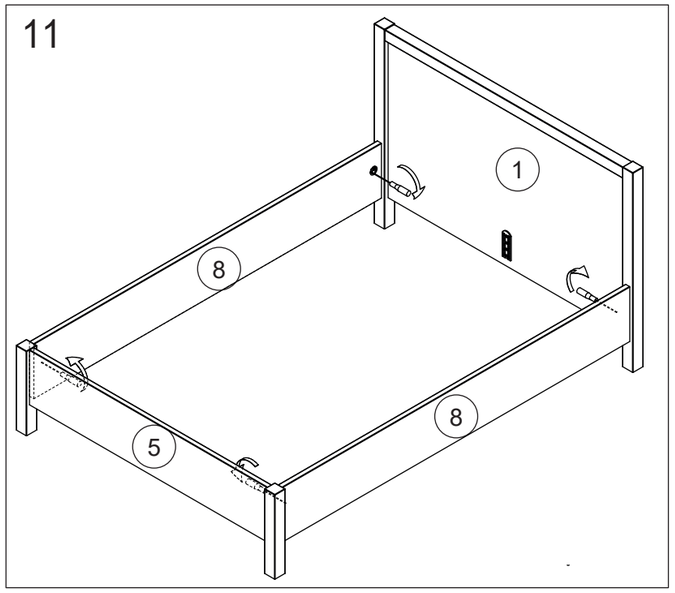
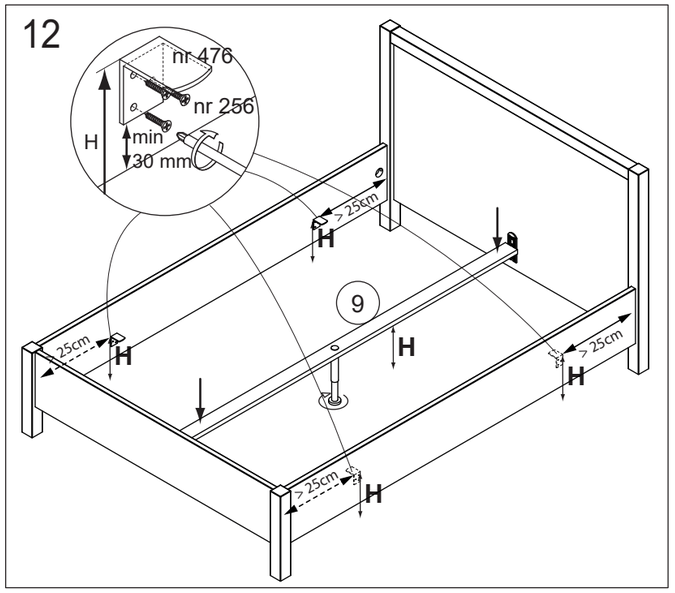
12