montage instructies
instructions de montage
assembly instructions
montage anleitung

GLORIA B1/B12

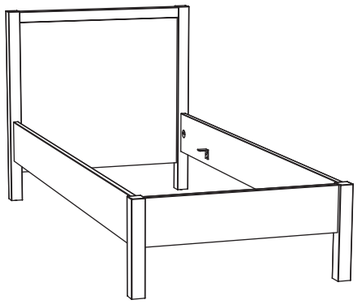

B1 99 x 100 x 212 cm

B12 129 x 100 x 212 cm

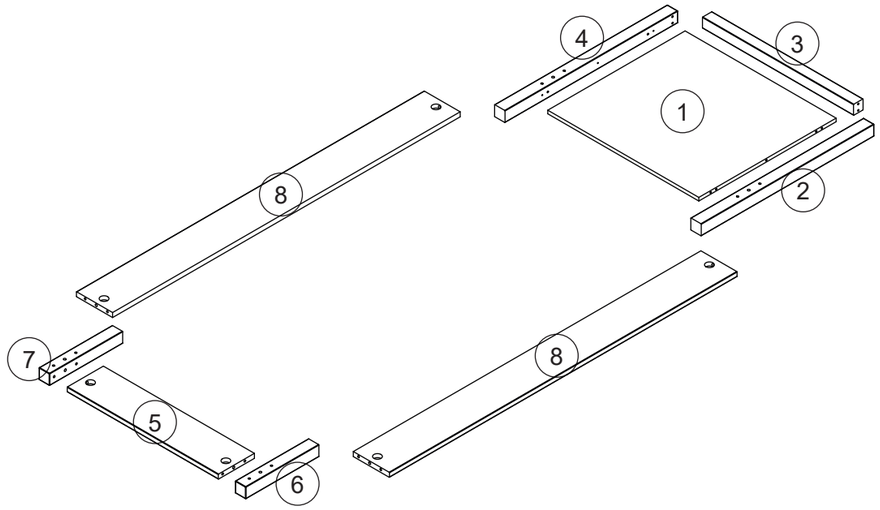

MADE IN BELGIUM

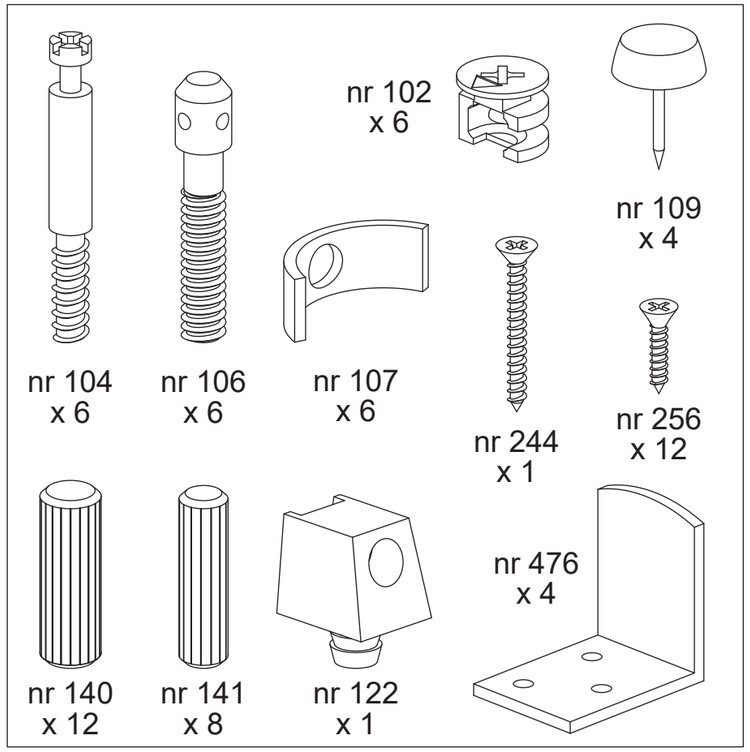

1

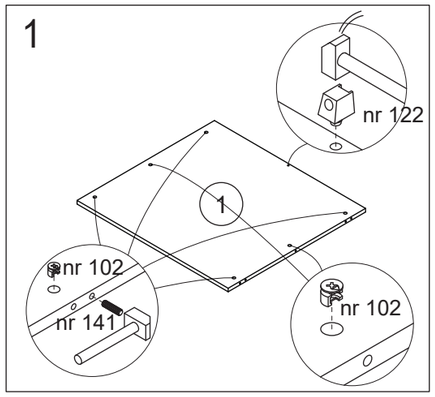

2

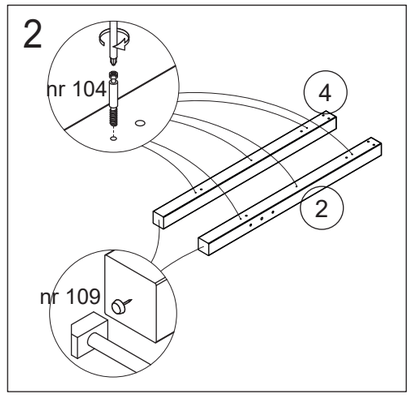

3

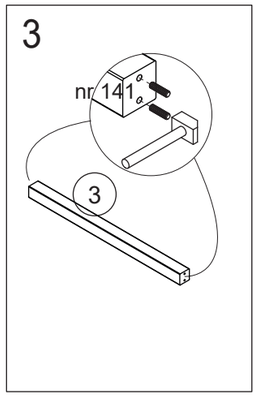

4

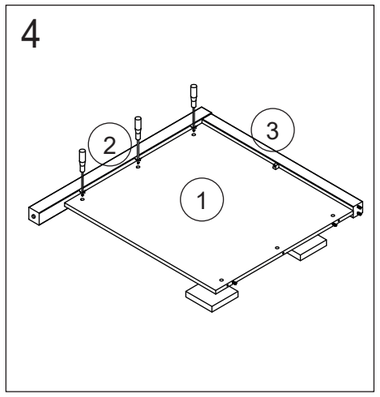

5

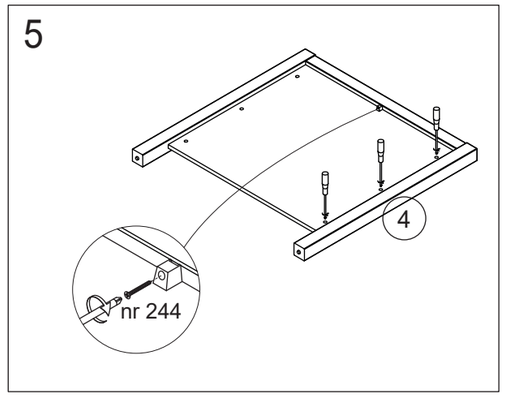

6

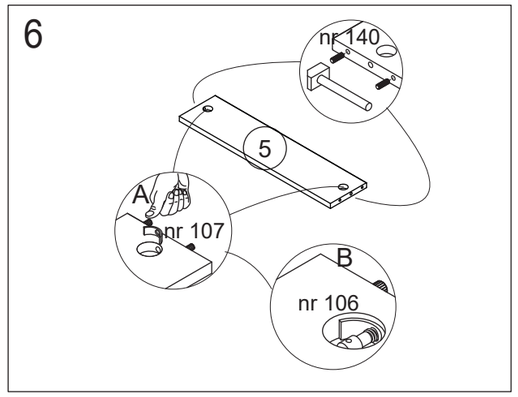

7

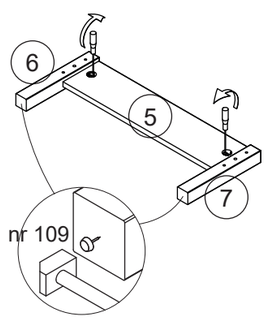

8

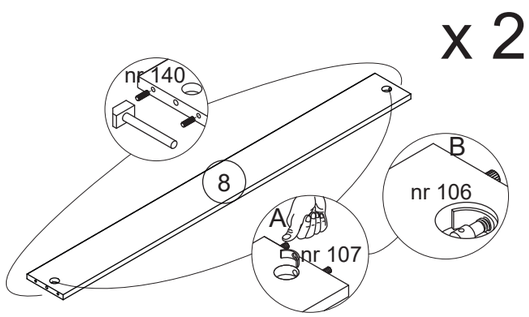

9

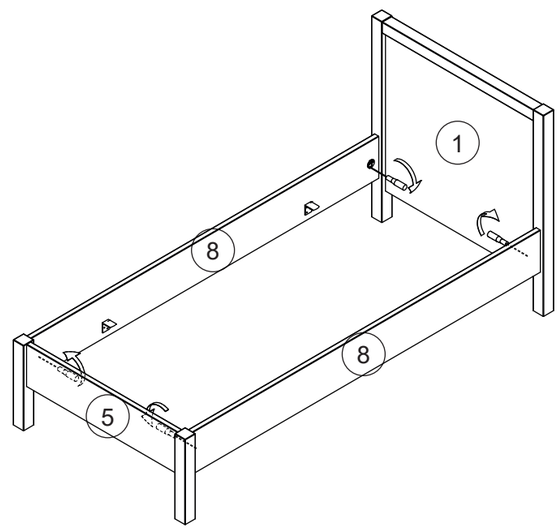
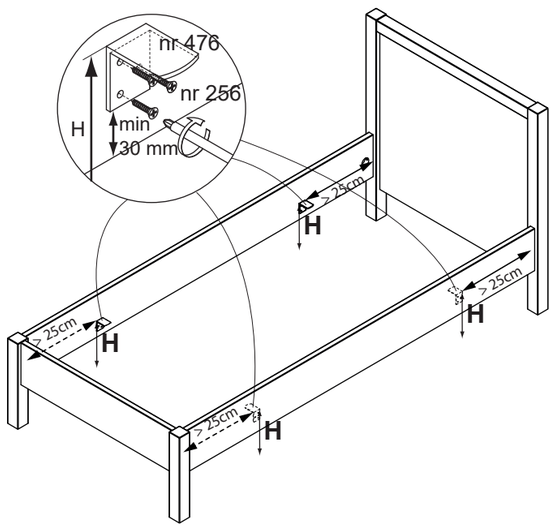
10