Model	DN SIT 101 900-3-E1	Issue Date	17 - 10 - 2023	Draw By	YN NG	Approved By / Date	
Form No	P13-RD-05-Rev01						
Description	Assembly Instructions	Revision	SIT 1.0	Checked By	YN NG	Sheet	01 / 01

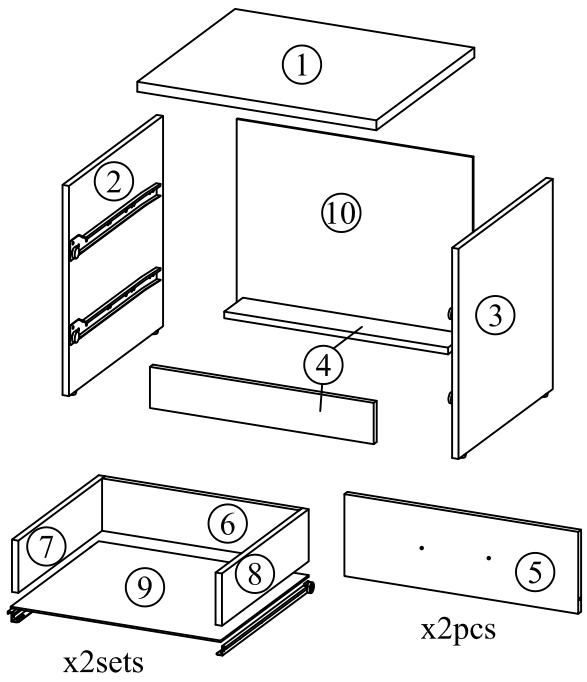

A		NAIL	32
B		PVC NAIL	4
C		M4 x 38mm CSK SCREW	8
D		M4 x 30mm CSLK SCREW	4
E		M3.5 x 12mm CSK SCREW	24
F		CAM BOLT	12
G		CAM NUT 12mm	12
H		WOOD DOWEL 6 x 25mm	16
I		METAL RUNNER 14"	2
J		PVC HANDLE AC81-160	2

1

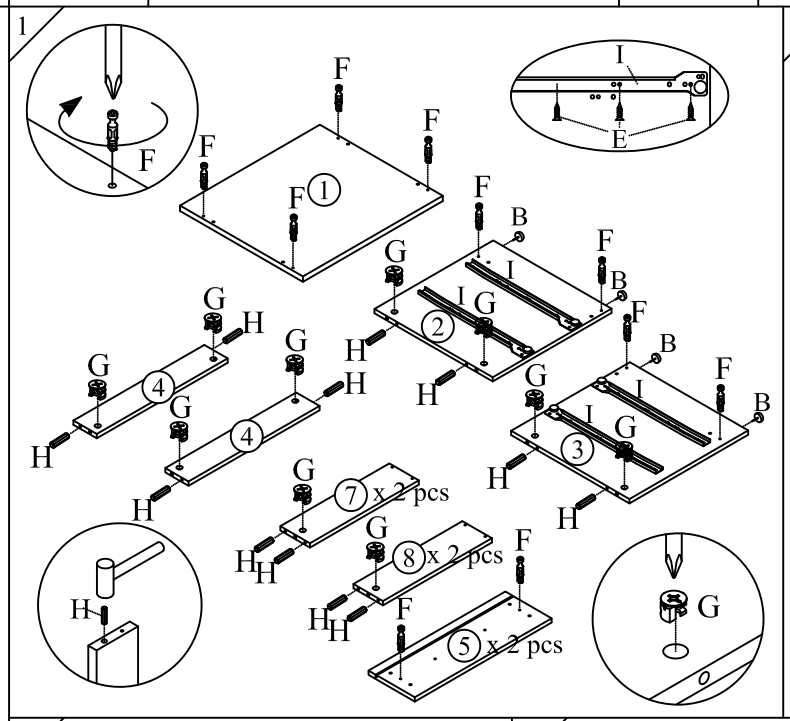

2

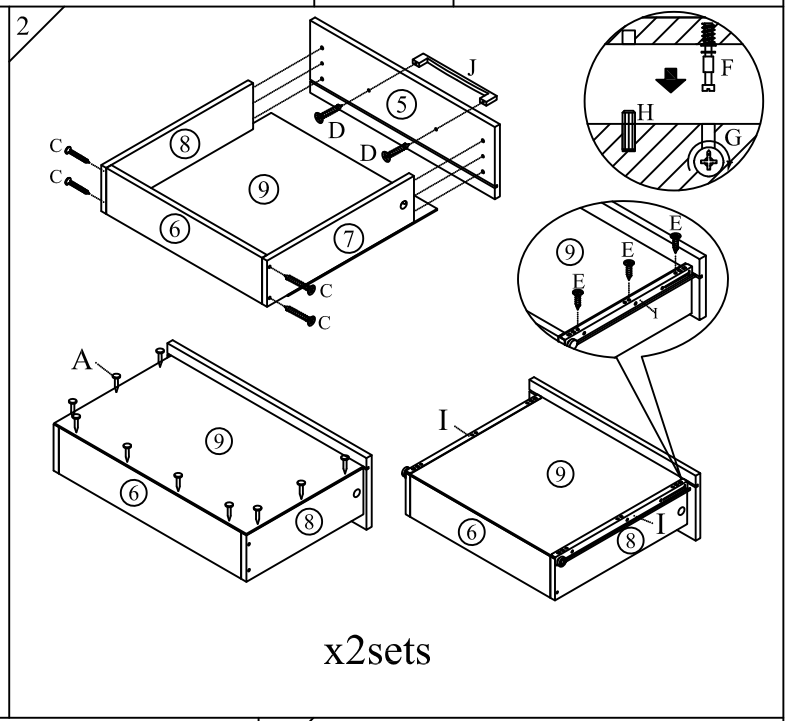

3

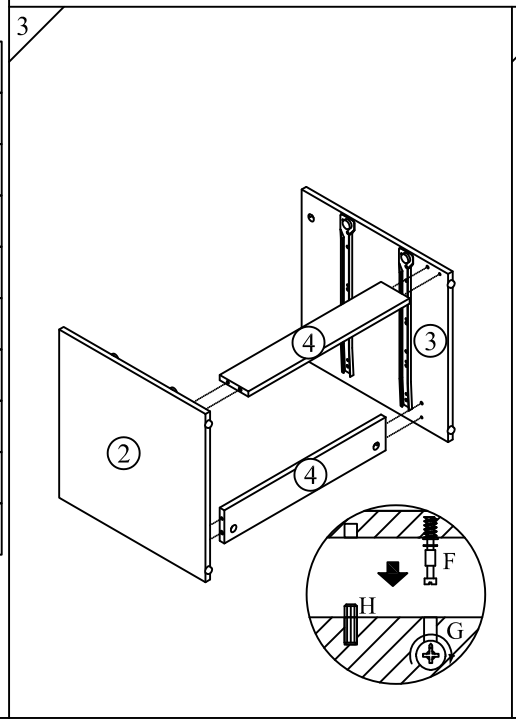

4

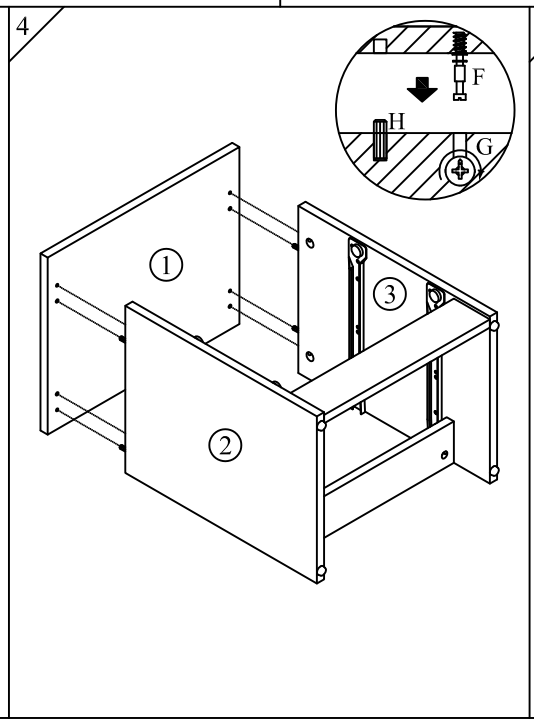
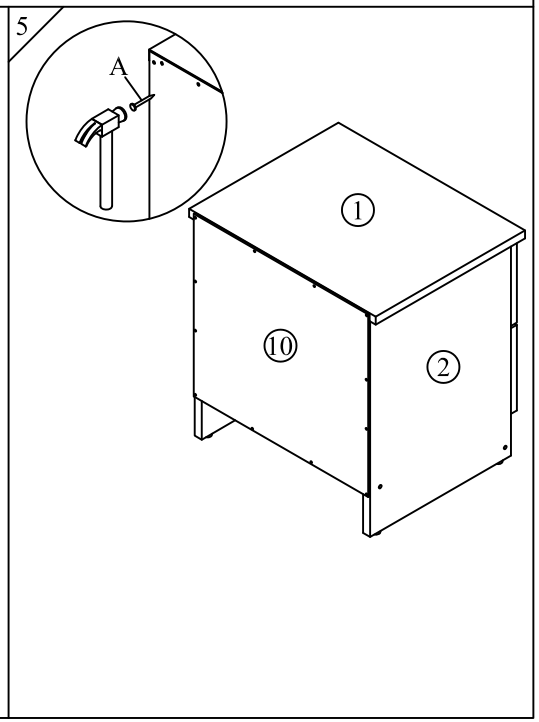
5